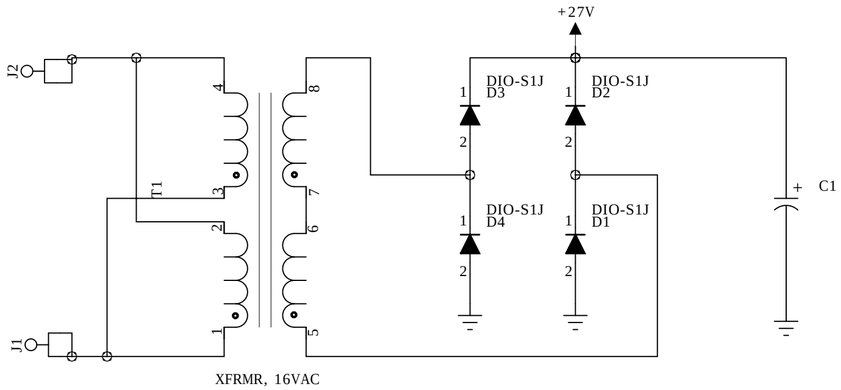

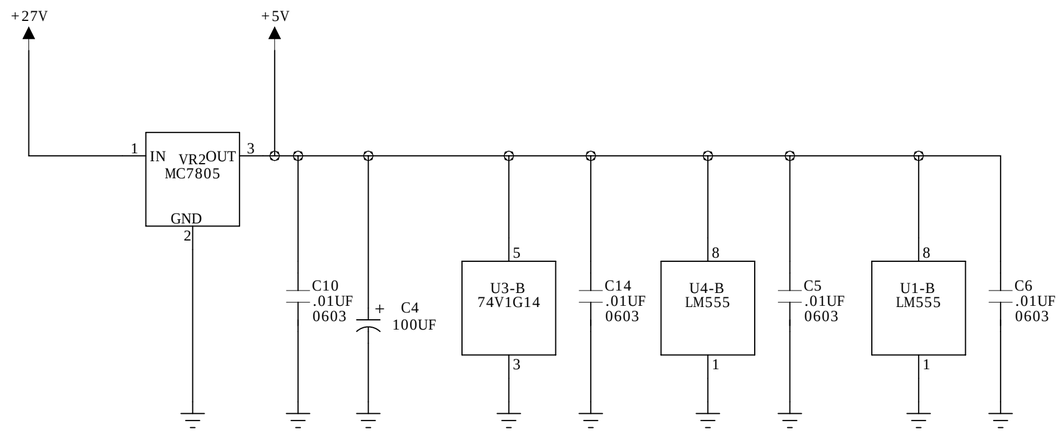

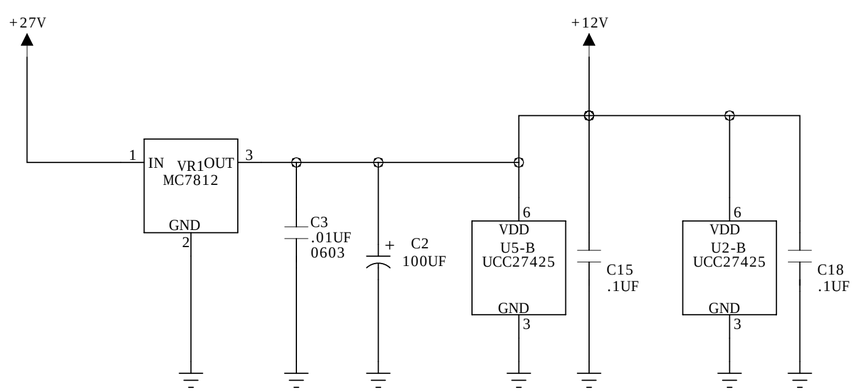

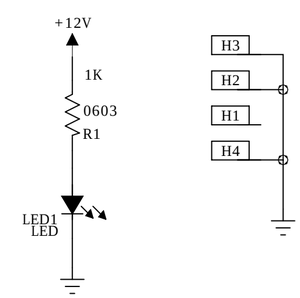

REV	DRSSTC DRIVER POWER	PAGE
E	Tom Blitch 2009	1 of 2

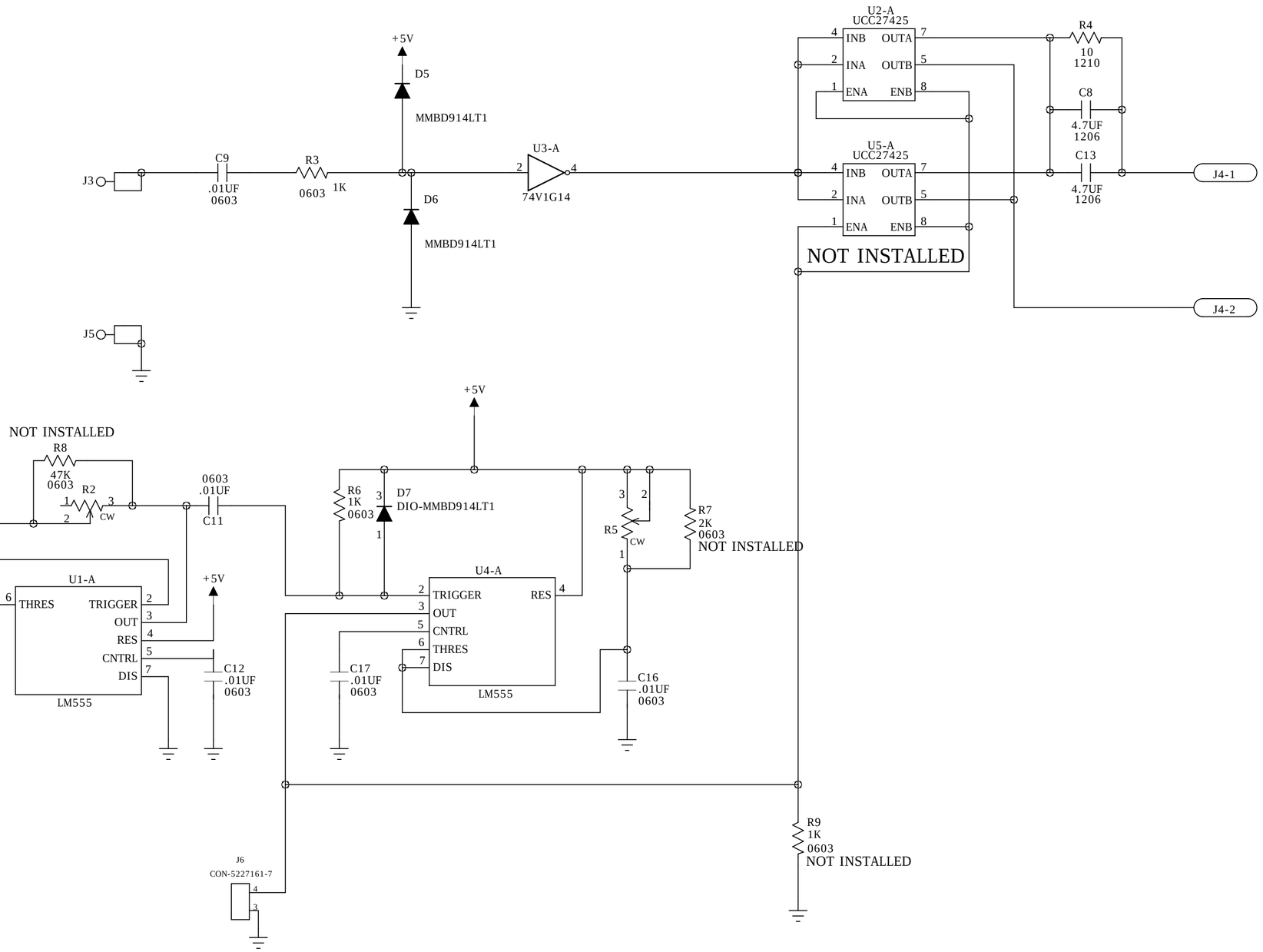

Rev	DRSSTC DRIVER LOGIC	Page
E	Tom Blitch 2009	2 of 2